MONT BLANC®

MADE IN SWEDEN

Komplettierung
Appendix
Tillägg

FK 10

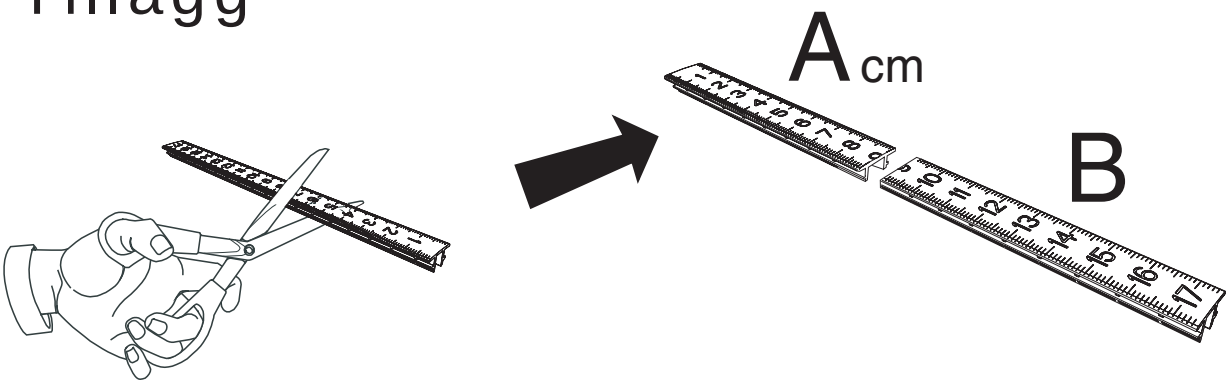

A Distance spacer / B slot cover
A Distanz / B Schlitzschutz

Breiteneinstellung für Ihr Fahrzeug Width settings for your vehicle				Spacer/Distanzen A Front/Vorne	Spacer/Distanzen A Rear/Hinten
HONDA	Accord	4-5-D,T	10/98-	9,9	9,1
Chev/Daew.	Tacuma/Rezzo		09/00-	16,9	14,6
KIA	Carens	5-D,T	07/02-	10,1	10,1
KIA	Cerato	5-D,T	04/04-	1,2	0,4
KIA	Picanto	5-D,T	04/04-	0,4	0,8
Mercedes	S-Klasse	4-D,T(w140)	91-98	8,7	8,2
SUZUKI	Liana	5-D,T	07/01-	3,0	0,7
TOYOTA	Corolla	5-D,T	01/02-	2,0	2,0
					A cm

Phone: +46 33 222700
Fax: +46 33 270882
Email: info@montblanc.se
Web: www.montblanc.se

Deutschland
Servicehotline: 02234 9599121

World Class Carrier Systems
JAC MONT BLANC®

Montageabstand auf Ihrem Autodach (Siehe Liste)
Roof rack positions on the roof for your vehicle (see list)

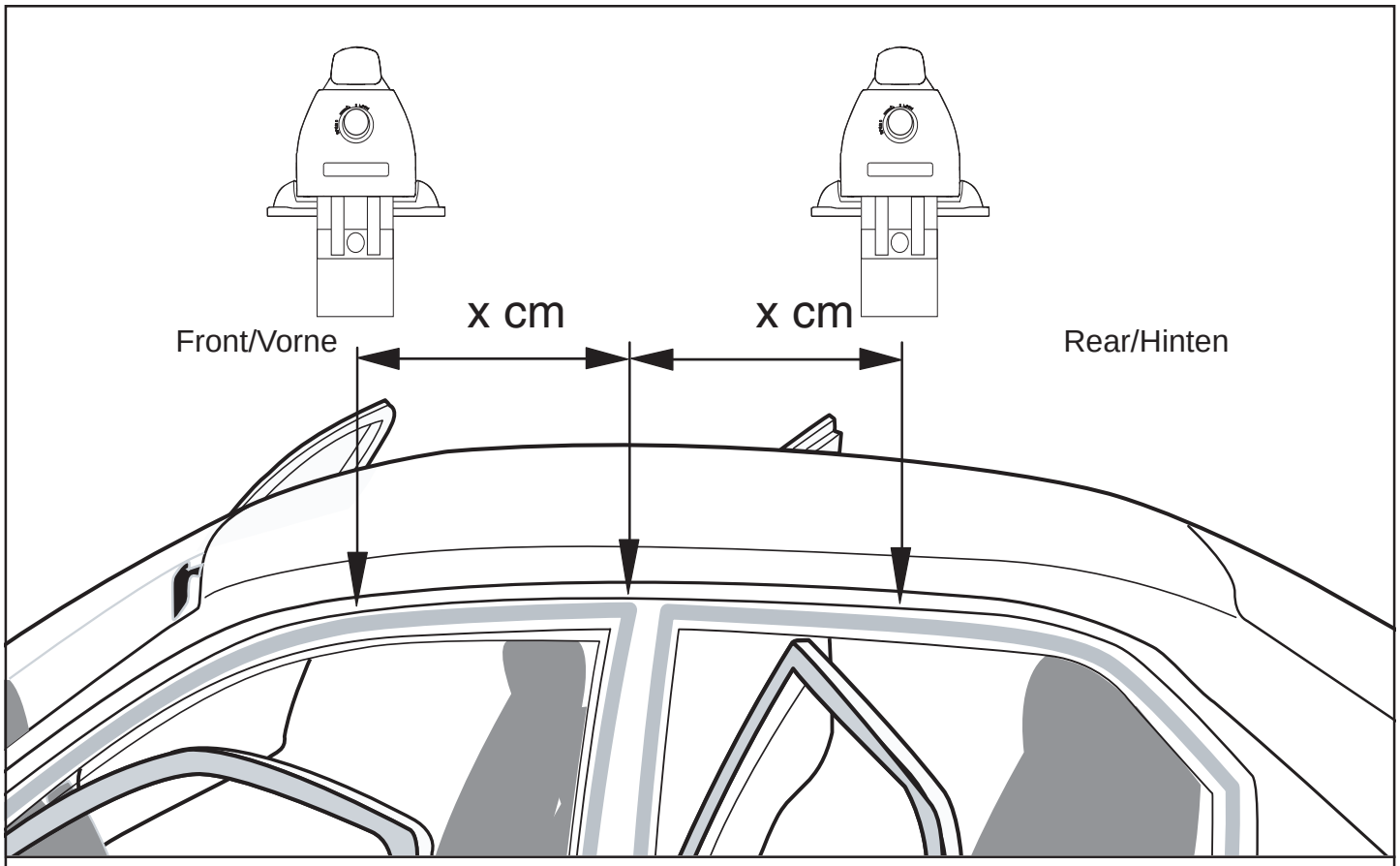

				Distance/Abstand Front/Vorne	Distance/Abstand Rear/Hinten
HONDA	Accord	4-5-D,T	10/98-	→ 25,0	40,0
Chev/Daew	Tacuma/Rezzo		09/00-	→ 30,0	40,0
KIA	Carens	5-D,T	07/02-	→ 10,0	60,0
KIA	Cerato	5-D,T	04/04-	→ 20,0	50,0
KIA	Picanto	5-D,T	04/04-	→ 20,0	50,0
Mercedes	S-Klasse	4-D,T	91-98(W140)	→ 30,0	40,0
SUZUKI	Liana	5-D,T	07/01-	→ 27,0	40,0
TOYOTA	Corolla	5-D,T	01/02-	→ 20,0	40,0
				cm	cm

0608 151310-3