This document and the data disclosed herein are intended to remain the property of the Mont Blanc Ind. AB and may not be reproduced, distributed or used in whole or in part without written permission from MONT BLANC IND. AB

Rev	Qty	Design change description	Date	Revised by
03	1	Part no (Code) corrected for Alu Profile 012550	2025-11-27	PEW

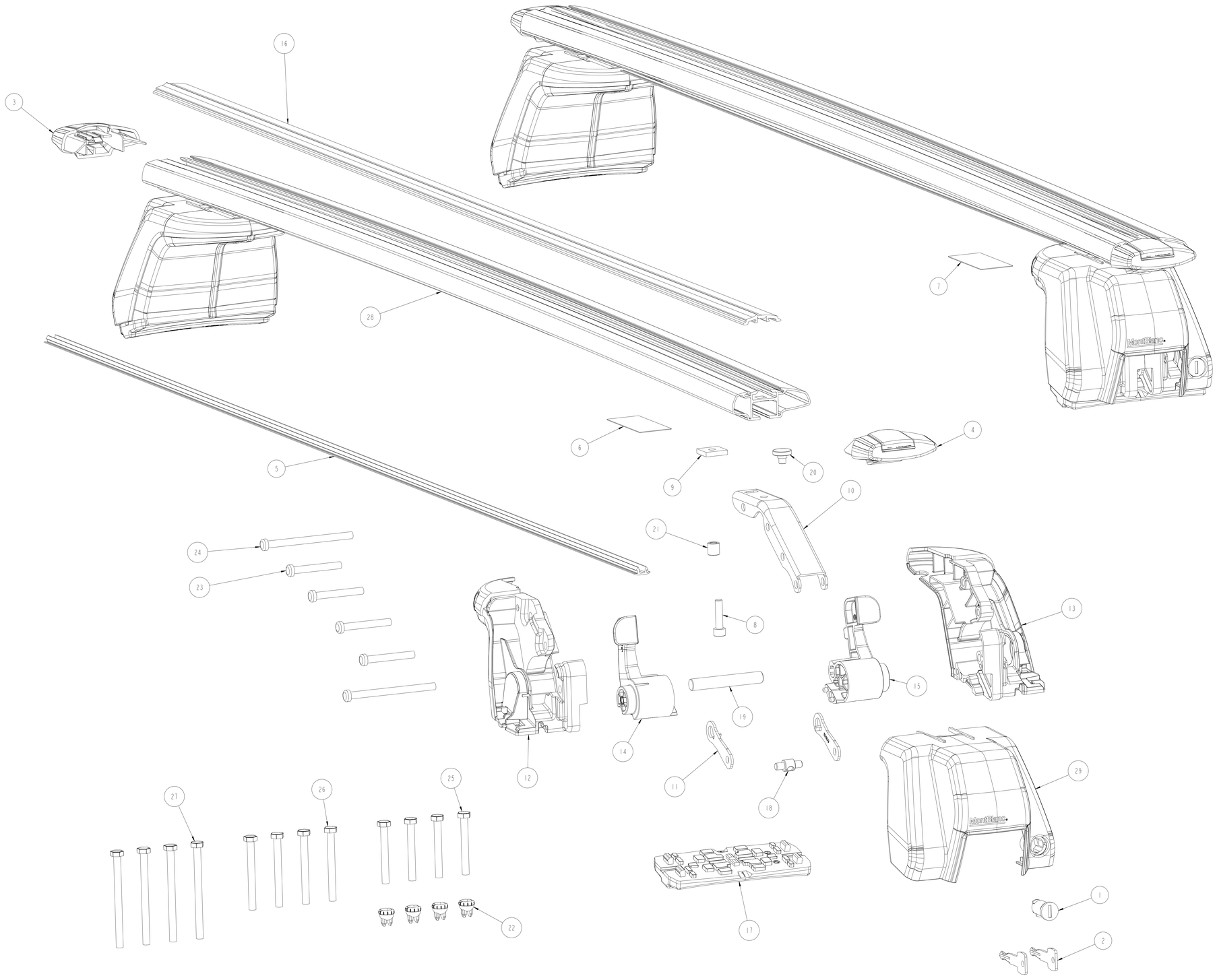

Item	Qty	Name	Material	Type	Code no	Draw no
29	4	Cover Furka Tampo	»PP GF30«	ASSEMBLY	304165	20009927
28	2	PROFIL ALUR10 L=1250 GALB	EN AW-6063-T6	PART	012550	20009896_1250
27	4	M6 hex head fully threaded	Steel 8.8	PART	013328	20009877_003
26	4	M6 hex head fully threaded	Steel 8.8	PART	013331	20009877_002
25	4	M6 hex head fully threaded	Steel 8.8	PART	013308	20009877_001
24	8	Screw for Plastic 6mm	Steel Hardened	PART	013305	20009874_002
23	16	Screw for Plastic 6mm	Steel Hardened	PART	013304	20009874_001
22	4	Screw cap	PA6 30GF Impact modified	PART	121074	20009873
21	4	T-Line 3 Steel Collar	EN S355 (SS 2172)	PART	012589	20009870
20	4	T-Line 3 Loadbar Rivet	EN S355 (SS2172)	PART	041605	20009868
19	4	Lever Shaft T-Line-3	EN S355 (SS2172)	PART	027414	20009857
18	4	Cotterpin Short T-Line 3	EN S355 (SS2172)	PART	027413	20009856
17	4	Rubber guard T-Line 3	SEBS 70 Shore A	PART	122745	20009847
16	2	PROFIL PVC 96.2 L=1253	PVC	PART	011550	20009841_003
15	4	Lever 2 T-Line 3 AM	PA6 GF 30	PART	122096	20009838
14	4	Lever 1 T-Line 3 AM	PA6 GF30	PART	122095	20009837
13	4	Foot 2 T-Line 3 AM	PA6 GF30	PART	122081	20009836
12	4	Foot 1 T-Line 3 AM	PA6 GF30	PART	122080	20009835
11	8	Link T-Line 3	EN 10292 HX300LAD	PART	112109	20009786
10	4	T-Line 3 Reinforcement Plate	EN 10292 HX300LAD	PART	112110	20009785
9	4	Square Nut	4.6	PART	021320	20006898_003
8	4	MC6S	8.8	PART	013324	20006255_005
7	1	Sticker 30x70	Plastic-transparent	PART	154088	154088_FURKA_RL
6	1	Sticker 30x70	Plastic-transparent	PART	154088	154088_FURKA_FL
5	2	OBTURATION LUMIERE BAR	EPDM	PART	011032	011032
4	2	EMBOUT GAUCHE AEROVA	PP ref 32	PART	010387	010387
3	2	EMBOUT DROIT AEROVA	PP ref 32	PART	010386	010386
2	2	Key 900 Long	Steel	PART	075531	00091
1	4	Lock 900		PART	075530	00090

03

Originator	Sheet	Format	Proj no	Scale	Create Date	Compare
PEW	1 of 1	A0	42-2137	4:5	2024-06-10	03/03

MONT BLANC Ind. AB
516 90 DALSJÖFORS
SWEDEN

RR ASM-1 T-Line 3

Code no 701001 State Released

Draw no 20009929-03