This document and the data disclosed herein or herewith is proprietary and may not be reproduced, used or disclosed in whole or in part without written permission from MONT BLANC IND. AB

Rev	Qty	Design change description	Date	Revised by

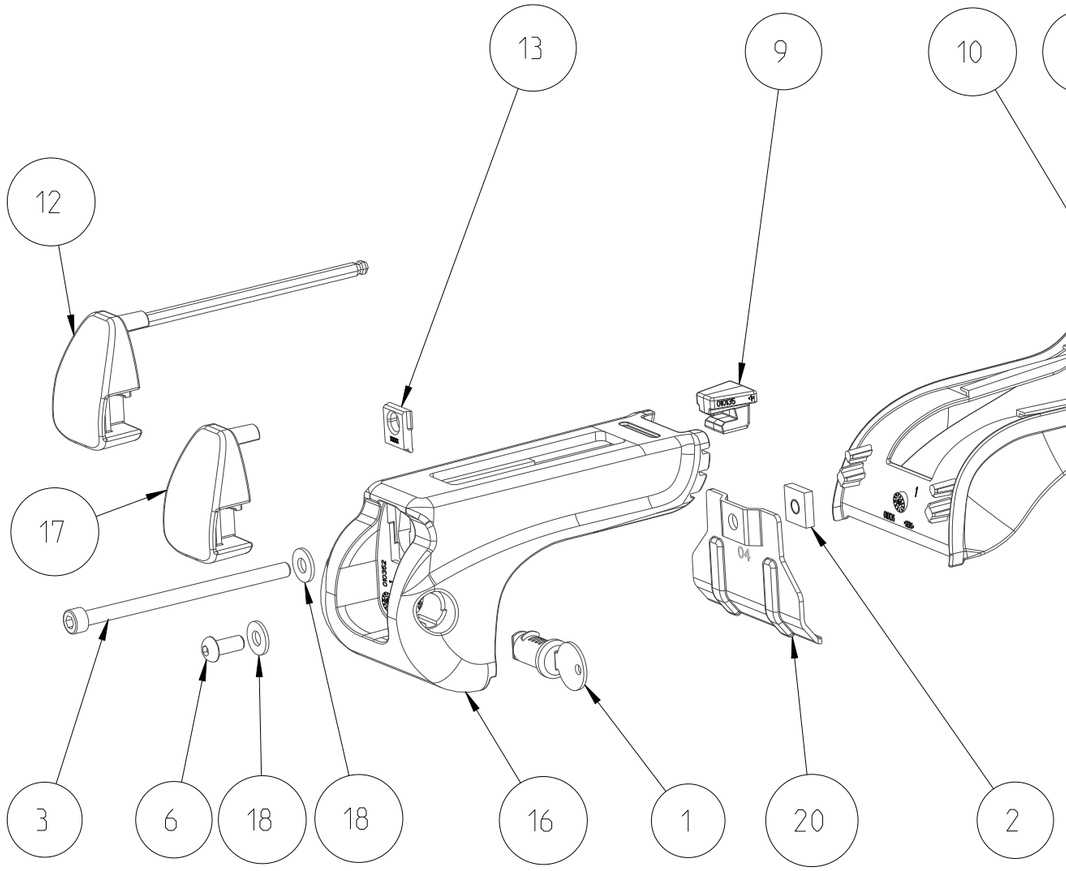

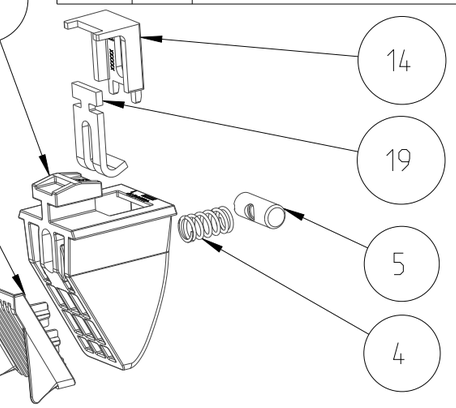

2:5

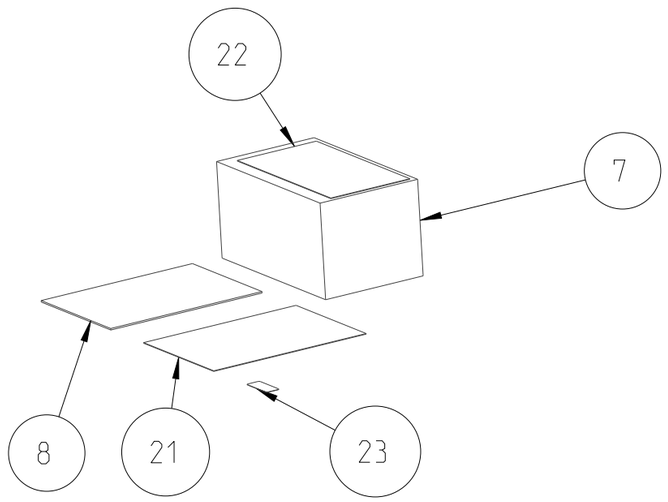

Item	Qty	Name	Material	Type	Code no	Draw no
23	1	Adhesif tracabilite vierge		PART	54986	54986
22	1	Adh affect MB roofbar AMC N°5418	Adhesive sticker	PART	064056	20009772
21	1	Notice AMC fix rail N°5418	Paper	PART	058302	20009771
20	4	Activa clamp n°4	S315	PART	013064	20009763
19	4	BRIDE DE SERAGE ZN	S315 MC DKP	PART	017558	017558
18	8	RONDELLE 14X6,2X1,5	ACIER 140 HV	PART	017508	017508
17	3	EMBOUT PIED SS CLE	PA 6.6 V30 NOIR	PART	010355	010355
16	4	PIED PHASE 2	PA66.6 V30 NOIR	PART	010352	010352
15	4	CONTRE-PIED	PA 66.6 V30 NOIR	PART	010349	010349
14	4	BUTEE ECROU CYLINDRIQUE	PP NOIR	PART	010348	010348
13	4	PLAQUETTE RETENUE VIS	PP	PART	010347	010347
12	1	EMBOUT PIED + CLE ALLEN		ASSEMBLY	010346	010346
11	4	PATIN CONTRE PIED	SEBS 75 ShA NOIR	PART	010345	010345
10	4	PATIN P045 PIED ACTIVA	T0323-75A TEFABLOC NOIR	PART	010136	010136
9	4	C MOBILE ACTIVA	PA66.6 V30 NOIR	PART	010135	010135
8	1	AVERTISSEMENT BARRES TOIT		PART	007389	007389
7	1	BOITE MB ROOFBAR AMC		PART	006031	006031
6	4	VIS BHC 6X14 EMP4	ACIER 10.9	PART	004680	004680
5	4	ECROU CYLINDRIQUE M6	ACIER QUALITE 6	PART	004561	004561
4	4	RESSORT B1,3 D=11 L=20	ACIER A RESSORT CLASSE B	PART	004559	004559
3	4	VIS CHC M6X100/100	ACIER QUALITE 8.8	PART	004558	004558
2	4	ECROU 15X15X4 M6	ACIER 8	PART	004099	004099
1	4	BARILLET 807R LONG		PART	001021	001021

Originator	Sheet	Format	Proj no	Scale		Create Date	Compare
ELL	1 of 1	A3	ECR 23-043	1:10		2023/03/22	01/01

MONT BLANC Ind. AB
516 90 DALSJÖFORS
SWEDEN

MB ROOFBAR AMC 5418

Code no 245418 | State Released

Draw-no 20009770-01